欢迎大家扫码关注，一起交流功率变换器软开关特性

直流增益推导

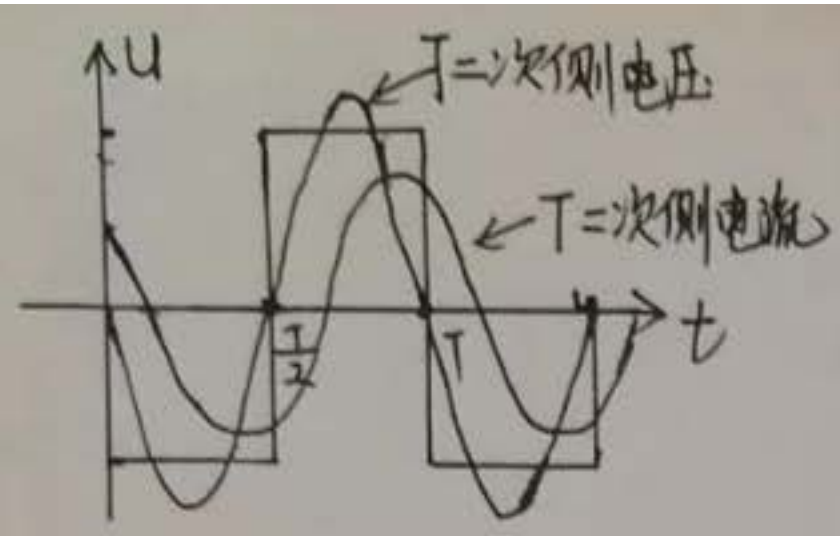

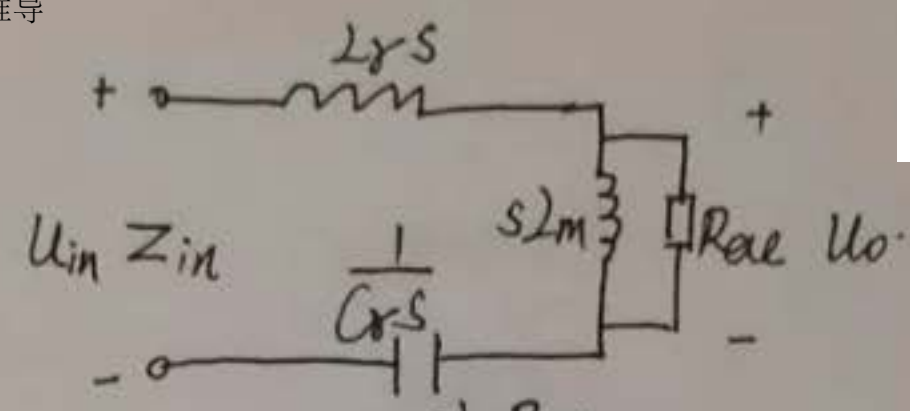

输出电流 $I_{ac2}=I_{PK}\sin(2\pi ft+\varphi)$ （φ可忽略）

输出电压 $V_{ac2}=\begin{cases}-V_0 & t\in(-\frac{T}{2},0)\\ +V_0 & t\in(0,\frac{T}{2})\end{cases}$

傅立叶级数

$$f(t)=\frac{a_0}{2}+\sum_{n=1}^{\infty}[a_n\cos(n\omega t)+b_n\sin(n\omega t)]$$

$$a_0=\frac{1}{\pi}\int_{-\pi}^{\pi}f(t)dt \quad a_n=\frac{1}{\pi}\int_{-\pi}^{\pi}\cos(k\omega t)f(t)dt$$

$$b_n=\frac{1}{\pi}\int_{-\pi}^{\pi}\sin(n\omega t)f(t)dt$$

$$a_n=\frac{2}{T}\int_{-\frac{T}{2}}^{0}-V_0\cos(n\omega t)dt+\frac{2}{T}\int_{0}^{\frac{T}{2}}V_0\cos(n\omega t)dt$$

$$=0$$

$$b_n=\frac{2}{T}\int_{-\frac{T}{2}}^{0}-V_0\sin(n\omega t)dt+\frac{2}{T}\int_{0}^{\frac{T}{2}}V_0\sin(n\omega t)dt$$

$$=\frac{2V_0}{2\pi n}(2-2\cos n\pi)$$

$$b_n=\begin{cases}\frac{4V_0}{n\pi} & n\text{为奇数}\\ 0 & n\text{为偶数}\end{cases}$$

$V_{ac2}=\frac{4V_0}{\pi}\sin\omega t$ 基波

$$\bar{I}_{ac2}=\frac{2}{T}\int_0^{\frac{T}{2}}I_{PK}\sin(\omega t)dt=\frac{2}{\pi}I_{PK}=I_0$$

$I_{PK}=I_{ac2}\Rightarrow I_{ac2}=\frac{\pi}{2}I_0\sin\omega t$

$$R_{ac2}=\frac{V_{ac2}}{I_{ac2}}=\frac{8}{\pi^2}R_0$$

$$R_{ac1}=\frac{8n^2}{\pi^2}R_0$$

$$\text{增益 } G=\frac{\frac{sL_mR_{ac}}{sL_m+R_{ac}}}{L_rS+\frac{sL_mR_{ac}}{sL_m+R_{ac}}+\frac{1}{C_rS}}$$

令 $S=j\omega$

$$G=\frac{j\omega L_mR_{ac}}{\frac{L_m}{C_r}+\frac{R_{ac}}{j\omega C_r}-\omega^2L_rL_m+j\omega L_rR_{ac}+j\omega L_mR_{ac}}$$

两边同时平方，令 $k=L_m/L_r$

$$|G|^2=\frac{\omega^2L_m^2R_{ac}^2}{(\frac{kL_r}{C_r}-\omega^2L_rL_m)^2+(\omega L_r+k\omega L_r-\frac{1}{\omega C_r})^2R_{ac}^2}$$

分子分母同除 ωC_r $\quad L_m=kL_r$

$$|G|^2=\frac{k^2\omega^4L_r^2C_r^2R_{ac}^2}{k^2\omega^2L_r^2(1-\omega^2L_rC_r)^2+(\omega^2L_rC_r+k\omega^2L_rC_r-1)^2R_{ac}^2}$$

$Q=\frac{\omega_rL_r}{R_{ac}}$ $\quad \omega_r$ 谐振频率

分子分母同除 R_{ac}^2

$$|G|^2=\frac{k^2\omega^4L_r^2C_r^2}{\frac{(1-\omega^2L_rC_r)^2k^2\omega^2Q^2}{\omega_r^2}+(\omega^2L_rC_r+k\omega^2L_rC_r-1)^2}$$

$$\omega_r^2=\frac{1}{L_rC_r}$$

$$|G|^2=\frac{k^2\frac{\omega^4}{\omega_r^4}}{(1-\frac{\omega^2}{\omega_r^2})^2\frac{k^2\omega^2Q^2}{\omega_r^2}+(\frac{\omega^2}{\omega_r^2}+k\frac{\omega_r^2}{\omega_r^2}-1)^2}$$

令 $x=\frac{f}{f_r}=\frac{\omega}{\omega_r}$ 两边同时开平方

$$|G|=\frac{k^2x^4}{(1-x^2)^2k^2x^2Q^2+(x^2+kx^2-1)^2}$$

$$G(x,k,Q)=\frac{1}{\sqrt{(1+k(1-\frac{1}{x^2})^2+(\frac{1}{x}-x)^2Q^2}}$$

Power Electronics Technology

输入阻抗推导

L为定值. X. Q为变量.

输入阻抗

$$Z_{in}=\frac{1}{sC_r}+sL_r+\frac{sL_m R_{ac}}{sL_m+R_{ac}}$$

令 $s=j\omega$ $$=\frac{1}{j\omega C_r}+j\omega L_r+\frac{j\omega L_m R_{ac}}{j\omega L_m+R_{ac}}$$

由 $j^2=-1$. j将分母化为不含j的表达式

$$Z_{in}=\frac{-j}{\omega C_r}+j\omega L_r+\frac{j\omega L_m R_{ac}(-j\omega L_m+R_{ac})}{(j\omega L_m+R_{ac})(-j\omega L_m+R_{ac})}$$

$$=\frac{-j}{\omega C_r}+j\omega L_r+\frac{j\omega L_m R_{ac}(R_{ac}-j\omega L_m)}{(R_{ac}+j\omega L_m)(R_{ac}-j\omega L_m)}$$

$$=j\omega L_r-\frac{j}{\omega C_r}+\frac{j\omega L_m R_{ac}^2+\omega^2 L_m^2 R_{ac}}{R_{ac}^2+\omega^2 L_m^2}$$

Power Electronics Technology

因为 $Q=\frac{2\pi f_r L_r}{R_{ac}}$ $\quad k=\frac{L_m}{L_r}$ $\quad x=\frac{f_s}{f_r}=\frac{\omega}{\omega_r}$

$$\Downarrow$$

$$L_r=\frac{QR_{ac}}{2\pi f_r}$$

$$Q=\frac{1}{2\pi f_r C_r R_{ac}} \Rightarrow C_r=\frac{1}{2\pi f_r Q R_{ac}}$$

则 $Z_{in}=j\omega L_r-\frac{j}{\omega C_r}+\frac{j\omega L_m R_{ac}^2}{R_{ac}^2+\omega^2 L_m^2}+\frac{\omega^2 L_m^2 R_{ac}}{R_{ac}^2+\omega^2 L_m^2}$

$$=j(\omega L_r-\frac{1}{\omega C_r}+\frac{\omega L_m R_{ac}^2}{R_{ac}^2+\omega^2 L_m^2})+\frac{\omega^2 L_m^2 R_{ac}}{R_{ac}^2+\omega^2 L_m^2}$$

$$=j(2\pi f L_r-\frac{1}{2\pi f C_r}+\frac{2\pi f L_m R_{ac}^2}{R_{ac}^2+(2\pi f)^2 L_m^2})+\frac{(2\pi f)^2 L_m^2 R_{ac}}{R_{ac}^2+(2\pi f)^2 L_m^2}$$

由 $L_r=\frac{QR_{ac}}{2\pi f_r}$ $\quad C_r=\frac{1}{2\pi f_r Q R_{ac}}$

$$Z_{in}=j\left(\frac{2\pi f}{2\pi f_r}QR_{ac}-\frac{1}{\frac{2\pi f\cdot 1}{2\pi f\, 2\pi f_r Q R_{ac}}}+\frac{2\pi f L_m R_{ac}^2}{R_{ac}^2+(2\pi f)^2 L_m^2}\right)+\frac{(2\pi f)^2 L_m^2 R_{ac}}{R_{ac}^2+(2\pi f)^2 L_m^2}$$

$$=j\left(\frac{f}{f_r}QR_{ac}-\frac{f_r}{f}QR_{ac}+\frac{2\pi f L_m R_{ac}^2}{R_{ac}^2+(2\pi f)^2 L_m^2}\right)+\frac{(2\pi f)^2 L_m^2 R_{ac}}{R_{ac}^2+(2\pi f)^2 L_m^2}$$

$$xR_{ac}=\frac{2\pi f_r L_r}{Q}$$

Power Electronics Technology

Date

$$Z_{in}=j\left(\frac{fQR_{ac}}{f_r}-\frac{f_rQR_{ac}}{f}+\frac{2\pi fL_m\frac{(2\pi)^2f_r^2L_r^2}{Q^2}}{\frac{(2\pi)^2f_r^2L_r^2}{Q^2}+(2\pi f)^2L_m^2}\right)$$

$$+\frac{(2\pi f)^2L_m^2\frac{2\pi f_rL_r}{Q}}{\left(\frac{2\pi f_rL_r}{Q}\right)^2+(2\pi f)^2L_m^2}$$

$$=j\left(\frac{fQR_{ac}}{f_r}-\frac{f_rQR_{ac}}{f}+\frac{2\pi fL_mf_r^2L_r^2}{f_r^2L_r^2+f^2L_m^2Q^2}\right)+\frac{\frac{f^2L_m^2\,2\pi f_rL_rQ}{f_r^2L_r^2+f^2L_m^2Q^2}}{\text{分子分母同除 } f_r^2L_r^2}$$

$$Z_{in}=j\left(\frac{fQR_{ac}}{f_r}-\frac{f_rQR_{ac}}{f}+\frac{2\pi fL_m}{1+\frac{f^2L_m^2Q^2}{f_r^2L_r^2}}\right)+\frac{\frac{f^2L_m^2\,2\pi f_rL_rQ}{f_r^2L_r^2}}{1+\frac{f^2L_m^2Q^2}{f_r^2L_r^2}}$$

又 $2\pi=\frac{R_{ac}Q}{f_rL_r}$

$$Z_{in}=j\left(\frac{fQR_{ac}}{f_r}-\frac{f_rQR_{ac}}{f}+\frac{\frac{R_{ac}Q}{f_rL_r}fL_m}{1+\frac{f^2L_m^2Q^2}{f_r^2L_r^2}}\right)+\frac{\frac{f^2L_m^2\frac{R_{ac}Q}{f_rL_r}f_rL_rQ}{f_r^2L_r^2}}{1+\frac{f^2L_m^2Q^2}{f_r^2L_r^2}}$$

令 $x=\frac{f}{f_r}$ $k=\frac{L_m}{L_r}$

$$Z_{in}=jR_{ac}Q\left(\frac{f}{f_r}-\frac{f_r}{f}+\frac{\frac{fL_m}{f_rL_r}}{1+\frac{f^2L_m^2Q^2}{f_r^2L_r^2}}\right)+QR_{ac}\frac{\frac{f^2L_m^2f_rL_rQ}{f_rL_r}}{1+\frac{f^2L_m^2Q^2}{f_r^2L_r^2}}$$

$$=jQR_{ac}\left(x-\frac{1}{x}+\frac{xk}{1+x^2k^2Q^2}\right)+QR_{ac}\frac{x^2k^2Q}{1+x^2k^2Q^2}$$

$$Z_{in}=QR_{ac}\left[\frac{x^2k^2Q}{1+x^2k^2Q^2}+j\left(x-\frac{1}{x}+\frac{xk}{1+x^2k^2Q^2}\right)\right]$$

Power Electronics Technology

阻性，虚部为0.

则 $x-\frac{1}{x}+\frac{xk}{1+x^2k^2Q^2}=0$

$$\frac{xk}{1+x^2k^2Q^2}=\frac{1}{x}-x$$

$$\frac{xk}{\frac{1}{x}-x}=1+x^2k^2Q^2$$

$$x^2k^2Q^2=\frac{xk}{\frac{1}{x}-x}-1$$

$$Q^2=\frac{xk}{(\frac{1}{x}-x)k^2x^2}-\frac{1}{k^2x^2}$$

$$=\frac{1}{(1-x^2)k}-\frac{1}{(xk)^2}$$

② $Q=\sqrt{\frac{1}{(1-x^2)k}-\frac{1}{(kx)^2}}$ 为 Z_{in} 呈阻性.

将Q(②)代入G(①)式

$$G(x,k,Q)=\frac{1}{\sqrt{[1+k(1+\frac{1}{x^2})]^2+(\frac{1}{x}-x)^2[\frac{1}{(1-x^2)k}-\frac{1}{(kx)^2}]}}$$

结论 Q确定 ⇒ f_{min} ⇒ 最大负载 ⇒ V_{out_max} ⇒ V_{in_min}

确定 f_{max}

22C本质 调节输入阻抗，稳定输出电压

Power Electronics Technology